HYDRA-STOP
FROM PENTAIR

20" - 24" INSTA-VALVE INSERTION VALVES

INSTALLATION INSTRUCTIONS

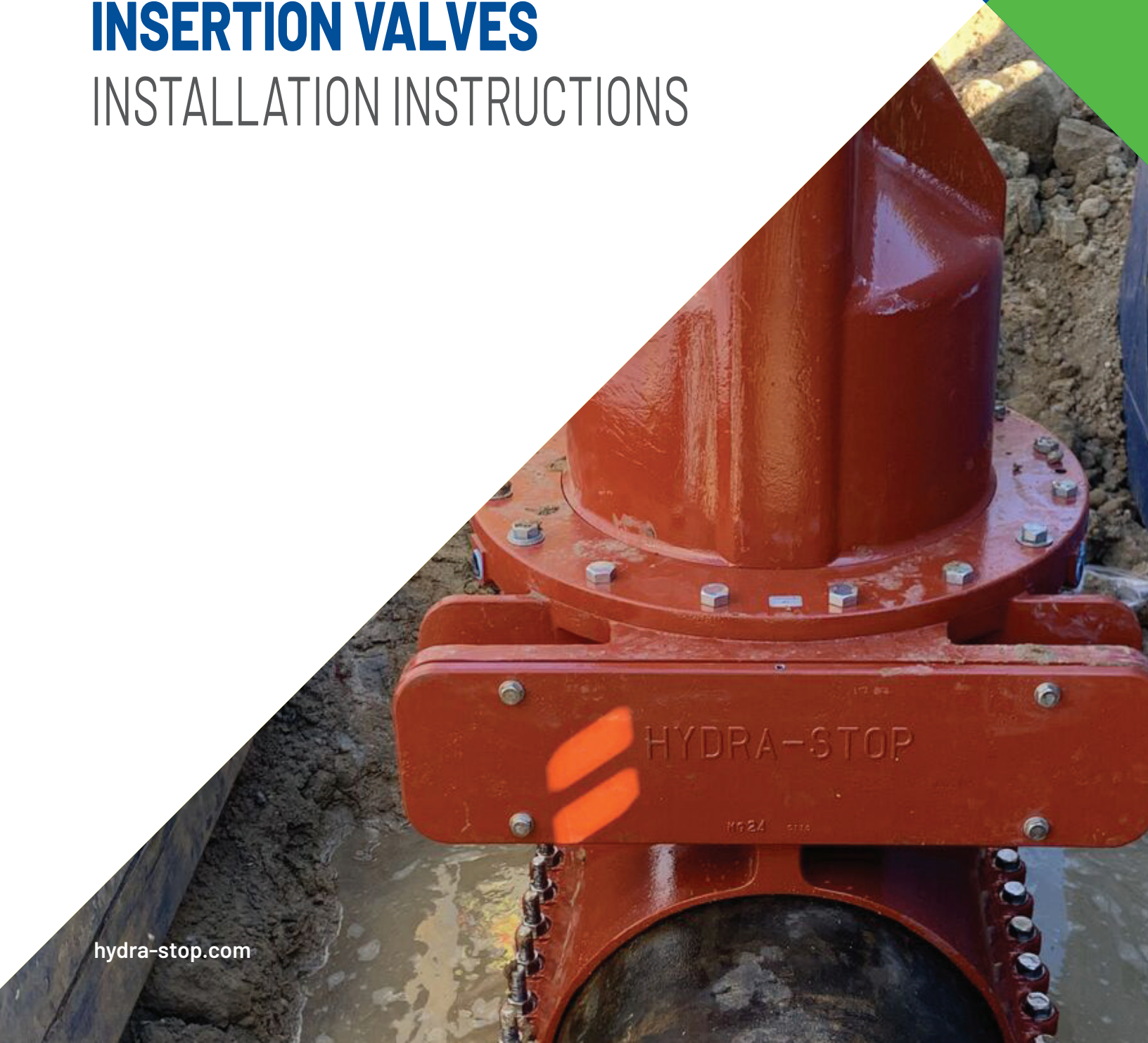

hydra-stop.com

TABLE OF CONTENTS

SECTION 1 – GENERAL SAFETY PRECAUTIONS

1.0.0 General Safety Precautions 3

SECTION 2 – VALVE INSTALLATION GUIDE

2.0.0 Preparation 4
2.1.0 Assembly of Valve Body and Cover 4
2.2.0 Assembly of Valve Body 4
2.3.0 Assembly of Temporary Gate Valve and Adapter Flange 4
2.4.0 Assembly of Adapter Flange (Only for 20-Inch Valve). 5
2.5.0 Hydrostatic Test 5
2.6.0 Tapping Procedure 6
2.6.1 Assembly of Tapping Machine 6
2.7.0 Performing the Tap 7
2.8.0 Assembly of Valve Cartridge, Insertion Machine, and Insertion Housing 7
2.9.0 Assembly of Inserting Tool 8
2.10.0 Inserting the Cartridge 8
2.11.0 Removal of Inserting Tool 9
2.12.0 Removal of Insertion Housing 9
2.13.0 Placing the Bonnet Flange 9
2.14.0 Removing the Temporary Gate Valve 9
2.15.0 Assembly of Side Lid And Operating Nut 9
2.16.0 Removal of Valve Body Ball Valve 9
2.17.0 Valve Operation 10

SECTION 3 – APPENDICES

Appendix A - 20" and 24" Mounting Bolt Torque Tightening Patterns 11
Appendix B - 20" Valve Excavation and Concrete Support Details 15
Appendix C - 24" Valve Excavation and Concrete Support Details 19
Appendix D - Seal Plug Remove and Replacement using the Seal Plug Tool 23
Appendix E - Insta-Valve 20-24 Product Cut Sheet 27
Appendix F - Equipment Identification 31
Appendix G - Standard Tools 35
Appendix H - Side Tapping and Horizontal Bevel Gear use 39
Appendix I - 20-24" Horizontial Excavation Details 45
Appendix J - 20-24" Valve Horizontial Concrete Support Details 49

Section 1.0.0 — General Safety Warnings

These instructions depict the use of the most up-to-date Hydra-Stop insertion valves, installation equipment, and accessories. Please be certain you are following the instructions for your equipment.

General Safety Precautions — Read and Follow Instructions

Carefully read and understand all safety messages in this manual before using the equipment. The manuals provided with the equalization pump must also be read for safety. The maintenance procedures are to be followed to keep the equipment in good working condition.

Personal Protection

Hydra-Stop recommends that installers wear required personal protective equipment including but not limited to:

- Hard Hat
- Safety Shoes
- Safety Glasses
- Ear Protection
- Gloves

Avoid wearing jewelry, such as rings, wristwatches, necklaces, or bracelets. If working near traffic, select ear protection that allows you to hear the traffic for safety.

Keep Spectators Away from Installation Area

Keep all spectators and other workers away from machines and work area(s) while in operation.

Clear Work Area

Clear the work area of all objects that might interfere with the proper operation of any tools. Avoid placing tools or other objects where they can fall into the pit.

Do Not Work in an Unsupported Trench

Do not work in trench with unstable sides, which could cave in. Specific requirements for shoring or sloping trench walls are available from several sources including federal and state offices. Be sure to contact suitable authorities for these requirements before working in the trench. A minimum 5'x 5' excavation is recommended.

Locate the existing pipe joints or fittings in the area and use the appropriate restraint methods if necessary.

Check Laws and Regulations

Know and obey all Federal, State, and local laws and regulations that apply to your work situation.

Handling the Equipment

To avoid back injury, use proper lifting techniques. Follow all equipment instructions when lifting heavy loads.

Check Hardware and Equipment

Make sure that all air or hydraulic line couplings are tightened and secured to eliminate the chance of accidental uncoupling. Use hose connection retaining devices such as locking rings, clips, pins, chains, or cables. Identify all equipment and tools necessary for the size of the Insta-Valve Plus 250 you intend to install. Inspect equipment to verify it is in good working condition and free of wear and damage prior to use. Never start an operation if the equipment is not in proper working order. Contact Hydra-Stop if equipment is not in working order.

Do Not Exceed Load Rating on Any Lifting Equipment

This includes but is not limited to lifting magnets, eyebolts and straps. Lifting magnets provided with Hydra-Stop equipment are labeled with a load rating.

WARNING: Failure to follow any of the above safety instructions or those that follow in this manual, could result in serious injury. Any operation involving work on pipe containing liquids or gases under pressure is potentially hazardous. It is necessary, therefore, that correct procedures be followed in the use and maintenance of this equipment to maintain a safe working environment.

No person should use this equipment who is not fully trained in the procedures stated in this manual, and who is not fully aware of the potential hazards connected with work on pipe containing liquids or gases under pressure.

The purchaser of this equipment is responsible for the way this equipment is used, maintained, and the training, competence and safety of the operators.

Should any difficulty arise at any time in the use of this equipment, please contact Hydra-Stop at 708-389-5111 immediately.

Section 2 — Valve Installation Guide

2.0.0 Preparation

2.0.1) Check the type of pipe, O.D., I.D., pressure, flow direction, and installation location prior to installation.

2.0.2) Measure and confirm pipe outside diameter where the Insta-Valve 20-24 is being installed to ensure the pipe meets the valve O.D. and I.D. range.

2.1.0 Assembly of Valve Body and Cover

Image 1

2.1.1) Thoroughly clean the pipe surface with a wire brush where the valve body will be installed to ensure all loose debris and material is removed (see Image 1).

NOTE: Inspect for flaws (ex. gouges, protrusions, excessive corrosion, etc.). Irregular surfaces should be avoided to assure maximum gasket sealing.

2.1.2) Utilizing safe lifting procedures or equipment, position the valve sleeve below the pipe.

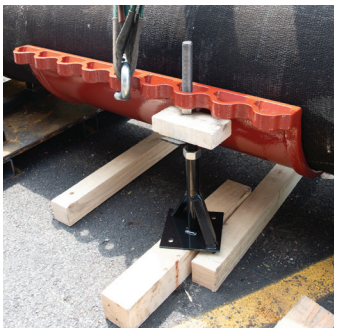

Image 2

2.1.3) Cradle the valve sleeve so that it wraps around the bottom of the pipe.

2.1.4) Use screw-style jack stands or blocking to support the sleeve until it is secured to the valve body (see Image 2).

NOTE: Use a base plate to keep jacks or blocking from sinking on weak or saturated ground.

CAUTION: Do not remove the lifting straps until the sleeve is secured in place with jacks or blocking.

Image 3

2.2.0 Assembly of Valve Body

2.2.1) Before lifting and rotating the valve body into the installation position, lubricate the surface of the rubber throat gasket at around the valve opening (see Image 3).

NOTE: Lubricate the entire surface of the rubber ring with the designated lubricant to prevent seal failure.

2.2.2) Rotate the valve body into the mounting position and lower the valve body onto the pipe (see Image 4 and 5).

2.2.3) Install mounting bolts to attach the sleeve to the valve body.

Image 4

2.2.4) Finger tighten the bolts with the nuts.

2.2.5) Put a level on the upper valve body and tighten the hexagon bolts and nuts. Check level as you tighten.

CAUTION: Do not remove the lift support from the valve body until the mounting bolts and nuts are tightened and torqued. Releasing the load prior to tightening the nuts and bolts could allow the valve body and sleeve to rotate.

2.2.6) Using a torque wrench, tighten nuts in proper pattern. Repeat tightening pattern in no more than 25 ft. lb. increments until recommended torque is reached.

Image 5

NOTE: Torque patterns are shown in Appendix A — 20" and 24" Mounting Bolt Torque Tightening Patterns.

NOTE: Torque of valve mounting bolts is: 105 ft. lbs.

CAUTION: Be sure to check the mounting nuts and bolts are properly tightened to specified torque to prevent seal failure.

2.2.7) Wait 10 minutes to allow the gasket to fully seat then re-tighten bolts to the recommended torque THREE additional times, following the tightening pattern.

2.2.8) Check and readjust the support blocks or jacks under the sleeve to be sure they are supporting the valve and pipe.

2.2.9) Remove the lifting straps on the upper side of the valve body.

2.2.10) Remove set pin cover plugs.

Image 6

2.2.11) Wrap Teflon seal tape on the set pin cover plugs and re-install into the valve body (See Image 6).

2.3.0 Assembly of Temporary Gate Valve

2.3.1) Open the temporary gate valve. Be sure to block under and support the gate (see Image 7 on next page).

2.3.2) Lubricate the temporary gate valve gasket (whole surface) and the O-ring on the rectangular face of the temporary gate valve flange.

Image 7

Image 8

2.3.3) Lift the temporary gate valve using 3 points of contact — 2 front locations and 1 back location (see Image 8).

NOTE: Hydra-Stop recommends utilizing a chain fall for the back lifting location to adjust the level of the temporary gate valve while being installed.

2.3.4) Remove the nuts and bolts holding the temporary gate valve cover in place on the valve body. Remove the temporary gate valve cover. Keep the bolts and nuts in a safe location.

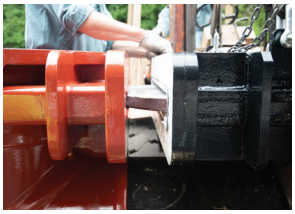

Image 9

2.3.5) Lift and move the temporary gate valve towards the temporary gate valve attachment port of the valve body. Level the temporary valve with the chain fall (see Image 9).

Image 10

2.3.6) Mount the temporary gate valve to the rectangle flange of the valve body using the bolts (M16). Adjust the circular portion of the gate valve into the gate valve slot on the valve body until the flanges come into contact with each other.

2.3.7) Block and support below the temporary gate valve after installing the nuts and bolts, and before removing the lifting devices (see Image 10).

Image 11

NOTE: All hardware should use washers on both sides of the bolts and nuts, with the exception of the two screws tightened into blind holes at the top/center of the temporary valve. These DO NOT require washers (see Image 11). If installing the 24" Insta-Valve, proceed to section 2.5.0.

2.4.0 Assembly of Adapter Flange (Only for 20" Valve)

2.4.1) Lift and move the adapter flange and lower until it contacts the flange of the upper valve body (see Image 12).

Image 12

2.4.2) Adjust and align the white line on the adapter flange with the white line on the valve body (see Image 13).

2.4.3) Mount the adapter flange to the valve body with the supplied nuts and bolts.

2.5.0 Hydrostatic test

Image 13

2.5.1) Remove the seal plug NPT cover plug using an open-ended wrench or adjustable wrench (see Image 14). Place in a safe location for later use. See Appendix B for complete seal plug tool setup and usage instructions.

Image 14

2.5.2) Remove the seal plug using the Seal Plug removal tool. Place seal plug in a safe location for later use.

2.5.3) Assemble the drain parts as shown (see Image 15). in the figure to the left, with the union fitting oriented down.

NOTE: Be sure to install the short nipple into the drain port, followed by the ball valve, another nipple, the 90-degree elbow, and the union connection to ensure successful ball valve port completion plug insertion completed in a later step.

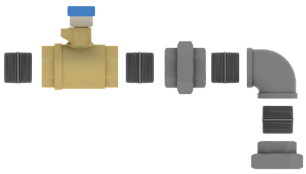

Image 15

2.5.4) Fill the valve body with 10 to 15 gallons of water.

Image 16

2.5.5) Using a lift, lower and place the test flange on the valve directly for the 24" valve or the adapter flange for the 20" valve (see Image 16).

Image 17

2.5.6) Connect a pressure gauge and pressure test pump to the test lid.

2.5.7) Begin pressure test procedure. Check to ensure no leaks are present under the testing pressure (see Image 17).

IMPORTANT: Hydrostatically pressure test a minimum of 1.25 times system pressure or a max of 1.5 times the rated working pressure of valve.

IMPORTANT: Never use air pressure. Instead use water pressure to prevent deformation and damage to the valve.

2.5.8) Blow off pressure before removing the test flange.

2.5.9) Remove the test flange.

2.5.10) Following the tightening pattern, re-torque mounting bolts to recommended torque ONE additional time.

2.6.0 Tapping Procedure

2.6.1 Assembly of Tapping Machine

Image 18

2.6.1) Assembly of the tapping equipment can be completed before reaching the job site to save time at the job site.

2.6.2) Position the tap machine horizontally. Be sure to block and support the tapping machine near the operating handles. Operate the handle to advance the boring bar forward until it is out of the tapping housing far enough to allow the cutter to be mounted (see Image 18).

Image 19

2.6.3) Lift the cutter and engage the clutches between the cutter and the boring bar.

2.6.4) Slide the pilot drill through the cutter and clutch drive assembly. Thread the pilot drill into the boring bar until it is hand tight against the boring bar (see Image 19).

2.6.5) Retract the boring bar back inside the tapping housing.

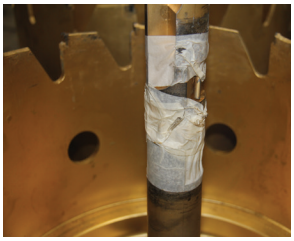

Image 20

2.6.6) Reset counter on tapping unit to zero.

2.6.7) Use masking tape to secure the coupon clips of the pilot drill (see Image 20).

2.6.8) Place the pilot drill tightening tool over the hexagon nut part of the pilot drill, support the edge of the tap housing and use a 65 mm open-ended wrench at the edge of the pilot drill tightening tool and tap the wrench several times with a large hammer for tightening (see Images 21 and 22).

IMPORTANT:

- Screw in the pilot drill by hand until the brim of the drill comes into contact with the boring bar to prevent the threads from being damaged.

Image 21

Image 22

- Use the tightening tool to tighten the pilot drill preventing the cutter and the drill from disconnecting during boring.
- Retract the cutter assembly fully after assembly to prevent damage to the cutter during lifting and placement on the adapter flange.
- Reset tapping counter to zero after the cutter assembly is fully retracted.
- Remove masking tape from pilot drill before proceeding with tap.

Image 23

2.6.8) Lift the tapping machine horizontally with three points of contact. Attach straps to the tapping machine lifting rings and a chain block connected to a hole on the housing flange (see Image 23).

2.6.9) Use a chain hoist to assist transitioning from horizontal to vertical. Stand the tapping machine upright in a vertical position on blocking and adjust lifting slings for a vertical lift. It is normal for the cutter assembly to protrude from the tapping housing (see Image 24).

Image 24

2.6.10) Mount the tapping machine on the valve body for the 24" valve or to the adapter flange for the 20" valve.

2.6.11) Connect hydraulic power unit to the tapping machine.

2.6.12) Connect the drain hose and the chip container to the drain part assembly on the valve body. Use the union fitting to attach the drain hose and chip container.

2.6.13) Open temporary gate valve and extend boring bar until pilot touches the top of pipe. You must continue to progress the boring bar/cutter based on the tapping depth (see Tapping Depth Information on next page).

TAPPING DEPTH INFORMATION

Tap until the counter reads 650 for 20- and 24-inch valves. You can continue to 700 on the counter if needed, but DO NOT PASS 700 on the counter.

NOTE: Tapping Depth information is based on the Hydra-Stop 20"–24" tapping machine. Use of other tapping machines could affect depth of tap.

2.7.0 Performing the Tap

2.7.1) Attach flushing hose and strainer to the flushing port ball valves.

2.7.2) Open the ball valves on top of the tapping housing to allow air and fluid to escape from the tapping housing after the pilot drill penetrates the pipe.

2.7.3) Open the drain assembly ball valve to assist in flushing of chips as the tap is in process.

2.7.4) Engage the drive unit. Slowly turn the handle assembly in a clockwise direction keeping slight, constant pressure until the tap is complete.

CAUTION: Do not overfeed the tap. Overfeeding the tap could cause the cutter to jam.

2.7.5) Close the ball valve on the tap housing as water fills the housing and flows from the valve.

2.7.6) The tap is complete when the depth counter reaches the desired depth.

2.7.7) Retract the cutter 2-3 turns before stopping the tapping machine.

2.7.8) Turn off the drive unit.

2.7.9) Retract the cutter assembly until the depth counter reaches zero / starting position.

2.7.10) Close the temporary gate valve. Turn the handle counterclockwise to close.

2.7.11) Open the ball valve on the tapping machine housing to ensure the temporary gate valve is completely closed.

2.7.12) Remove the tapping machine assembly.

2.7.13) Close flushing port ball valve.

2.7.14) Remove flushing strainer from hose. Leave hose attached for insertion equalization.

2.8.0 Assembly of Valve Cartridge, Insertion Machine, and Insertion Housing

2.8.1) Place the valve cartridge on supports.

Image 25

2.8.2) Lubricate the rubber ring on the valve cartridge with the designated lubricant (see Image 25).

2.8.3) Remove the 2 bolts of the valve stem cover on the upper side of the valve cartridge which are in line with the shoulders of the valve cartridge (see Image 26).

Image 26

2.8.4) Connect the valve suspender to the valve cartridge using the bolts just removed. Tighten these bolts until finger tight and there is no gap between the bolts and the valve suspender — an open-ended wrench can be lightly used if needed (see Image 27).

Image 27

2.8.5) Place the empty insertion housing on support to provide clearance for the valve cartridge assembly which is taller than the insertion housing (see Image 28).

NOTE: Approximately 8" of clearance is required.

Image 28

2.8.6) Lift the inserting machine flange above and centered over the valve cartridge. Lower insertion flange until the valve suspender makes contact with the insertion flange (see Image 29).

Image 29

2.8.7) Thread the insertion flange gut rod into the valve suspender (see Image 30).

Image 30

2.8.8) Lift the insertion flange with the cartridge attached.

2.8.9) Lift the valve cartridge and insertion flange, then place them on the insertion housing. Make certain the white line on the insertion flange is aligned with the white line on the insertion housing (see Image 31).

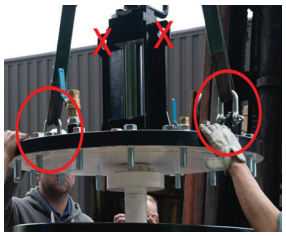

Image 31

2.8.10) Connect the insertion flange to the insertion housing with the supplied bolts and nuts (16 M24 bolts, nuts and washers).

CAUTION: Be sure to match the white lines on the valve cartridge with the white line on the insertion flange with the white line on the insertion housing to prevent the valve cartridge from being inserted improperly (see Image 33 on next page).

Image 32

Image 33

- Be sure to adjust the bolt holes of the insertion flange and the upper flange of the insertion housing to prevent the valve cartridge from being inserted improperly.
- Never lift insertion assembly with the insertion machine loops. Use the hooks attached to the insertion flange.

2.9.0 Assembly of Inserting Tool

2.9.1) Lift the insertion housing and valve cartridge assembly (see Image 32).

2.9.2) Lower and place the insertion housing on the valve body for the 24" valve or the adapter flange for a 20-inch valve.

Image 34

2.9.3) Make sure the white line on the insertion housing is aligned with the white line on the side of the valve body or adapter flange (see Image 34).

2.9.4) Connect the insertion housing to the valve body or adapter flange using the supplied bolts, nuts, and washers.

2.9.5) Connect the equalization hose to the equalization port of the insertion housing with the union coupling on the side of the valve body.

2.10.0 Inserting the Cartridge

2.10.1) Open the ball valves of the insertion housing and the ball valve on the side of the valve body.

2.10.2) Open the ball valve on the top of the insertion flange to release air as the insertion housing fills with water.

2.10.3) Rotate the handle for the temporary gate valve to fully open.

Image 35

CAUTION: Be sure to equalize pressure in the insertion housing prior to opening the temporary gate valve to prevent damage to the temporary gate valve.

2.10.4) Set the insertion depth gauge in the area shown in images 35 and 36.

Image 36

2.10.5) Using the insertion tool handle, turn the handle counter-clockwise to lower the cartridge.

2.10.6) Continue to turn the handle until the inserting rod lightly comes into contact with the depth gauge (see Image 37).

Image 37

2.10.7) Remove the gauge and continue to turn the insertion handle until the valve cartridge comes to a hard stop — approximately 1/2 to 1 turn.

2.10.8) Retrieve the set pin cover plugs removed earlier.

NOTE: Number of set pins:

- 20" = 6 pins
- 24" = 8 pins

2.10.9) Tape the threads of the cover plugs with Teflon tape and set aside.

Image 38

2.10.10) Using 17mm Allen wrenches, two operators should simultaneously tighten the set pins in line with the white paint mark on the valve and the set pin 180 degrees opposite. Tightening in tandem will prevent over-tightening in any direction and will cause the bonnet to rotate to a centered position if the insertion is slightly off center (see Image 38).

2.10.12) Once the first set of opposing set pins have been tightened into place, check for proper set pin depth using the Go / No-Go set pin gauge.

NOTE: There are separate Go / No-Go gauges for the 20" and 24" valves.

2.10.13) Insert the GO side of the gauge into the set pin hole and check that the shoulder of the gauge is touching the outside face of the valve. If the shoulder does not reach the valve, then the set pin has not been set deep enough. Continue to tighten the opposing set pins simultaneously

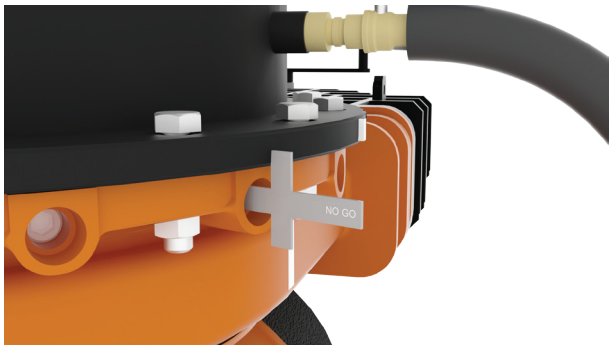

Image 39

until the shoulder on the GO side of the gauge touches the valve (see Image 39 on previous page).

2.10.14) Once this GO depth has been confirmed, flip the gauge around and insert the NO-GO side into the set pin hole. Ensure that the shoulder on this side **DOES NOT** touch the valve. If the shoulder does touch the valve, it means the set pin has been inserted too far and must be withdrawn slightly.

2.10.15) Once the first two set pins are in place, tighten the remaining set pins into place, tightening opposite set pins simultaneously where possible. Perform the same GO / NO-GO checks as were performed on the first pair of set pins.

2.10.16) Rotate the inserting handle counterclockwise 1/2 to one turn to unload the inserting force loaded on the inserting rod.

2.10.17) Close the ball valve on the equalization port of the valve body to stop equalization.

2.10.18) Slowly open the ball valve on the insertion flange by small amounts and blow off any pressure.

IMPORTANT:

- Never release equalization pressure before the valve cartridge has been secured with the set pins.
- Be sure to insert all set pins to the designated depth and make them as even as possible to prevent the valve cartridge from becoming misaligned.

2.11.0 Removal of Inserting Tool

Image 40

Image 41

2.11.1) Use an adjustable wrench to turn the gut rod several turns counterclockwise until it disengages from the valve suspender (see Image 40).

2.11.2) Disengagement is achieved when the gut rod can move freely up and down.

2.11.3) Rotate the insertion handle clockwise to retract the insertion rod completely.

2.11.4) Remove the equalization hose from the insertion housing and the valve body (see Image 41).

2.11.5) Open the insertion housing ball valve and drain water from the insertion housing.

2.12.0 Removal of Insertion Housing

2.12.1) Loosen and remove the nuts and bolts securing the insertion housing to the valve body or the adapter flange.

Image 42

2.12.2) Using lifting straps, remove the insertion housing.

2.12.3) Remove the valve suspender from the valve cartridge.

2.12.4) Remove the adapter flange if installing a 20-inch valve.

2.13.0 Placing the Bonnet Flange

2.13.1) Lift, orient, and place the bonnet flange on the upper side of the valve body and assemble it with the special hexagon bolts and nuts M24 nuts (see Image 42).

2.13.2) Check the tightening torque of those hexagon bolts and nuts using a torque wrench.

Tightening torque of hexagon bolts: 105 ft. lbs.

2.14.0 Removing the Temporary Gate Valve

2.14.1) Attach lifting straps with three points of contact to the temporary gate valve and apply slight lifting pressure.

2.14.2) Loosen and remove the nuts and bolts securing the temporary gate valve from the valve body.

2.14.3) Remove the temporary gate valve from the valve body.

2.15.0 Assembly of Side Lid and Operating Nut

2.15.1) Place the temporary gate valve cover over the temporary gate valve port. Secure the cover with the 4 M16 nuts, bolts, and washers removed earlier (see Image 43).

Image 43

2.15.2) Check the tightening torque of those hexagon bolts and nuts using a torque wrench.

NOTE: Tightening torque of hexagon bolts: 45 ft. lbs.

2.15.3) Re-install the two bolts in the valve stem cover.

2.15.4) Set the operating nut on the valve stem and secure with the M16 bolt.

2.15.5) Insert and tighten the set pin cover plugs.

2.16.0 Removal of Valve Body Ball Valve

2.16.1) Fully close the ball valve on the side of the valve body.

2.16.2) Remove the nipple, elbow, and the female union joint assembly (see Image 44 on next page).

2.16.3) Attach the completion plug removed from the valve body in section **2.4 Hydrostatic Test, Step 1** to the bottom

Image 44

edge of the inserting rod of the special ball valve removal tool.

See Appendix B for complete seal plug tool setup and usage instructions.

2.16.4) Remove the ball valve and the short nipple.

2.16.5) Apply sealing tape to the outer cover plug threads.

2.16.6) Thread the outer cover plug into the valve body.

2.16.7) Tighten the outer cover plug with an adjustable wrench.

2.16.8) Fully disassemble, clean and store equipment.

2.16.9) Temporary Gate Valve Maintenance: Wipe down temporary gate valve seals after each use by extending the gate valve out of the gate valve housing. Remove grease, chips, etc.

IMPORTANT: Support the gate valve plate when extending out of the gate housing to protect the gate valve feed screw.

2.16.10) Order replacement parts, if necessary, to replace lost, damaged, or worn components.

Congratulations. Your Insta-Valve 20–24 is installed.

2.17.0 Valve Operation

NOTE: Do not operate the valve until pipe restraints (not included with valve) are installed or the concrete support has fully cured. See Appendix B for 20" valve or Appendix C for 24" valve concrete support details.

Operating Turns are below. Numbers may vary +/-3 turns.

20" valve: 72–74 turns

24" valve: 78–80 turns

APPENDIX

Appendix A - 20" and 24" Valve Mounting Bolt Torque Patterns

© 2026 Hydra-Stop | All Rights Reserved. | Specifications subject to change without notice. This page has been intentionally left blank.

Appendix A — 20" and 24" Valve Mounting Bolt Torque Patterns

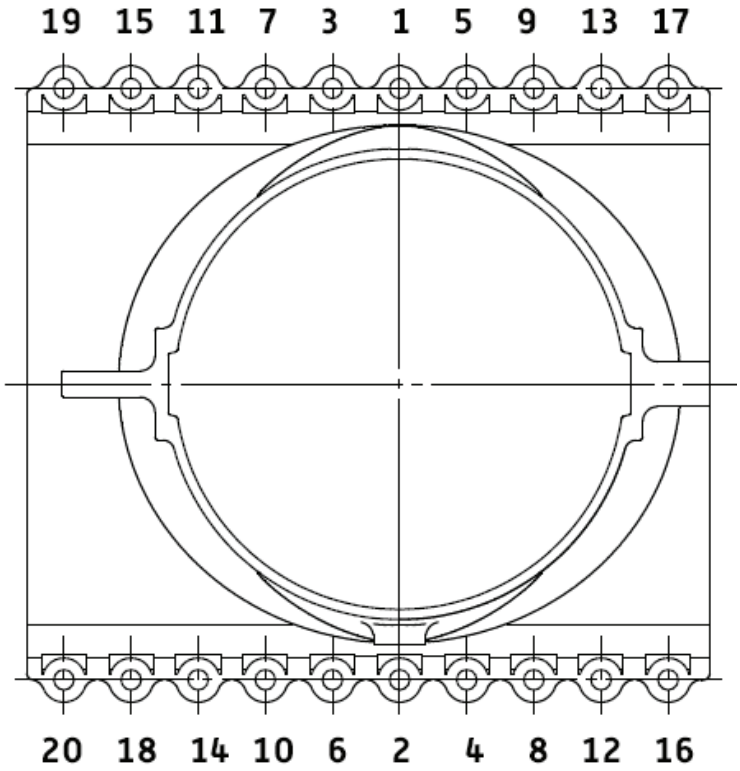

20"valve
bolt torque tightening pattern

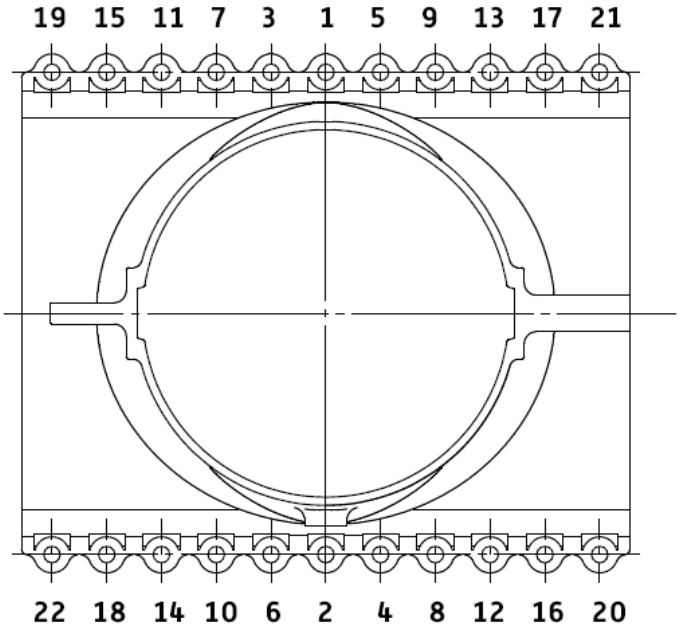

24" valve
bolt torque tightening pattern

© 2026 Hydra-Stop | All Rights Reserved. | Specifications subject to change without notice. This page has been intentionally left blank.

APPENDIX

Appendix B — 20" Valve Excavation and Concrete Support Details

© 2026 Hydra-Stop | All Rights Reserved. | Specifications subject to change without notice. This page has been intentionally left blank.

Appendix B — 20" Valve Excavation and Concrete Support Details

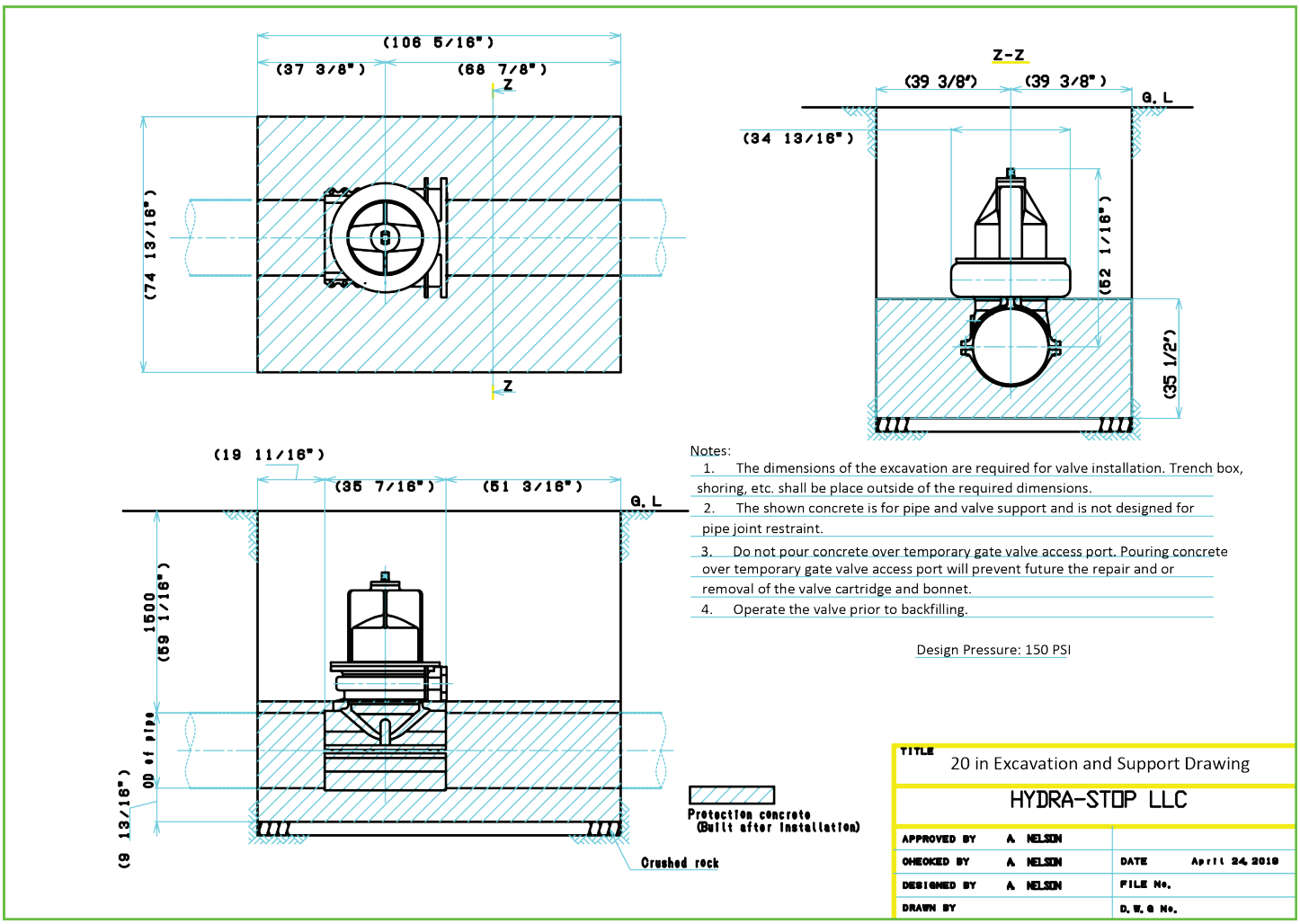

Minimum excavation dimension: 6′ wide x 9′ long
Recommended excavation dimension: 8′ wide x 9′ long

© 2026 Hydra-Stop | All Rights Reserved. | Specifications subject to change without notice. This page has been intentionally left blank.

APPENDIX

Appendix C — 24" Valve Excavation and Concrete Support Details

© 2026 Hydra-Stop | All Rights Reserved. | Specifications subject to change without notice. This page has been intentionally left blank.

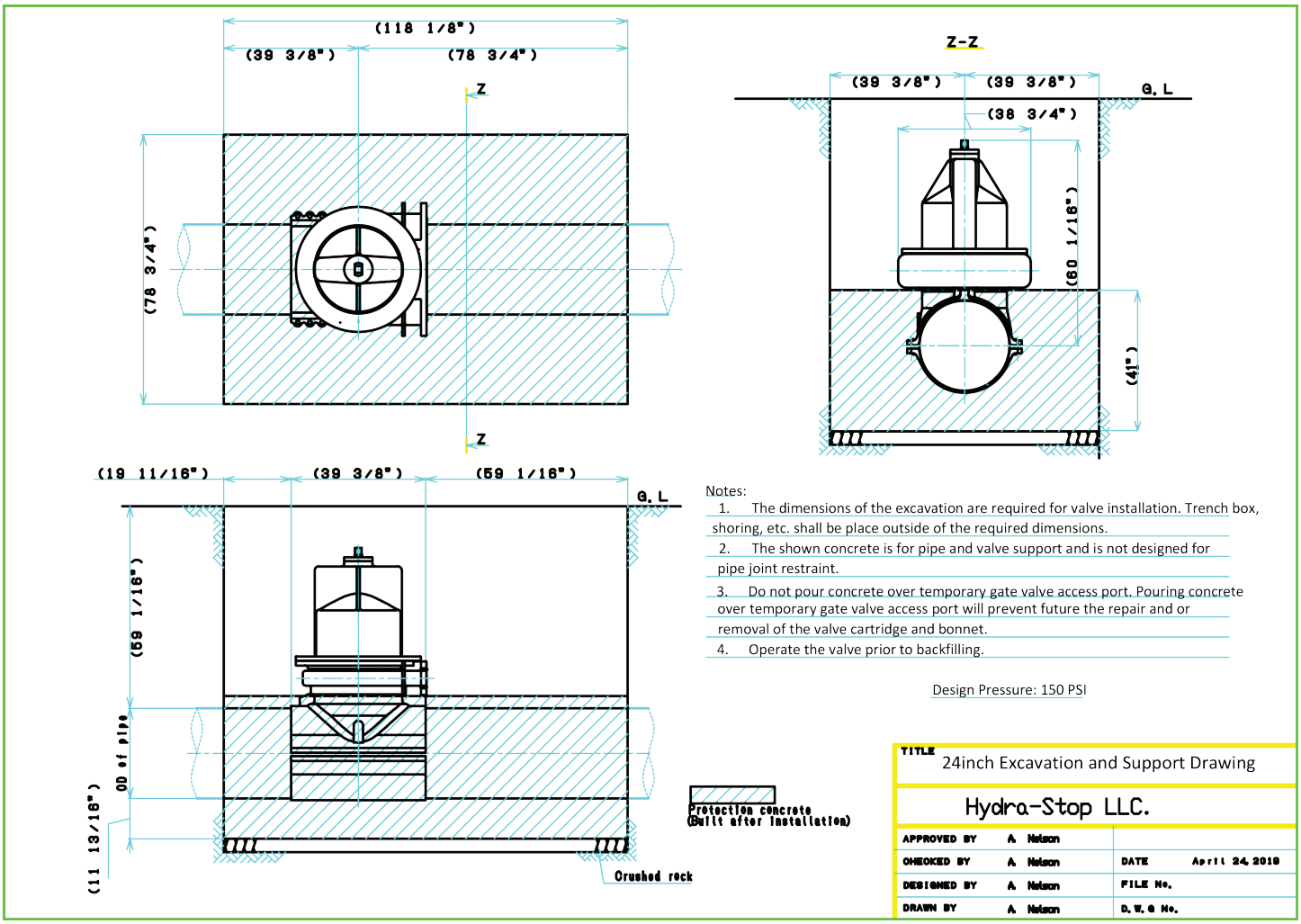

Minimum excavation dimension: 6′ wide x 9′ long
Recommended excavation dimension: 8′ wide x 9′ long

© 2026 Hydra-Stop | All Rights Reserved. | Specifications subject to change without notice. This page has been intentionally left blank.

APPENDIX

Appendix D — Seal Plug Removal and Replacement Using the Seal Plug Tool

© 2026 Hydra-Stop | All Rights Reserved. | Specifications subject to change without notice. This page has been intentionally left blank.

Appendix D — Seal Plug Remove and Replacement Using the Seal Plug Tool

Image 46

Image 47

Image 48

Image 49

Image 50

Image 51

D.1) Remove the seal plug NPT cover (see Image 46).

D.2) Thread the seal plug removal tool into the side port opening — wing nuts on the tool may contact the valve body. For seal plug removal, it is acceptable if the tool is not fully tightened in the side port opening threads (see Image 47).

D.3) Unthread the rear cylinder cover from the seal plug tool. This exposes the fixing nuts and the gut rod (see Image 48).

D.4) Loosen the handle of the inserting rod stop collar (see Image 49).

D.5) Slide the stop collar fully backwards.

D.6) Tighten the locking lever handle.

D.7) Slide inserting rod assembly forward (see Image 50).

D.8) Repeat steps 4–7 until inserting rod contacts the seal plug.

D.9) Slightly twist the inserting rod so the square of the inserting rod head engages the square of the seal plug.

D.10) Thread the gut rod into seal plug by turning the locked fixing nut (see Image 51).

D.11) Tighten the locking lever handle.

D.12) Remove the seal plug by turning the inserting rod assembly, using the handles, counterclockwise.

Image 52

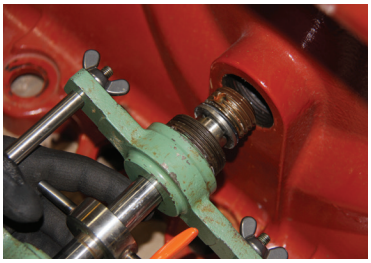

Image 53

D.13) Once unthreaded, draw the inserting rod backwards, loosening and tightening the locking clamp lever until the rod is drawn back to a hard stop (see Image 52).

D.14) Unthread the plug insertion tool from the valve body (see Image 53).

D.15) Retain the plug insertion tool and sealing plug in a safe place until used for final completion.

D.16) Perform the tap and the insertion of the valve cartridge.

Seal Plug Replacement and Side Port Ball Valve Removal

D.17) Remove the drain parts except for the side port ball valve and the short nipple.

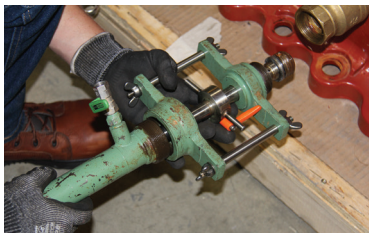

Image 54

Image 56

D.18) Thread the rear cylinder cover onto the seal plug tool (see Image 54).

D.19) Thread the seal plug tool into the side port ball valve.

D.20) Slowly open the small air vent ball valve on the rear cylinder (see Image 55).

D.21) Fully open the side port ball valve. Bleed off any air through the rear cylinder cover ball valve and allow the seal plug tool to fill with water (see Image 56).

D.22) Close the rear cylinder ball valve.

D.23) Loosen the handle of the inserting rod stop collar.

D.24) Slide the stop collar fully backwards.

Appendix D — Seal Plug Remove and Replacement Using the Seal Plug Tool

D.25) Tighten the locking lever handle.

D.26) Slide inserting rod assembly forward.

D.27) Repeat steps 7–10 until seal plug makes contact with the inner threads of the side port.

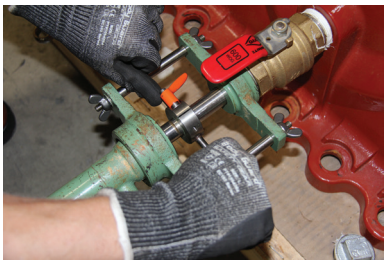

Image 57

Image 58

Image 59

Image 60

D.28) After the seal plug contacts the inner threads, turn the inserting rod assembly clockwise using the handles (see Image 57).

D.29) After the seal plug is tightened, fully open the air vent valve and check whether there is fluid leaking from the air vent valve. If no liquid is leaking continue to step 30.

D.30) Remove the rear outside cylinder (see Image 58).

D.31) Loosen the gut rod by turning the fixing nut counterclockwise and remove the gut rod from the seal plug (see Image 59).

D.32) Loosen the handle of the inserting rod stop collar.

D.33) Slide the stop collar fully forwards (see Image 60).

D.34) Tighten the locking lever handle.

D.35) Slide inserting rod assembly fully backwards.

D.36) Repeat steps 33–35 until the inserting rod is fully retracted.

D.37) Close the seal port ball valve.

D.38) Unthread the seal plug tool from the ball valve.

D.39) Re-check for leaks and remove the side port ball valve and nipple.

D.40) Wrap seal tape on seal plug cover. Thread and tighten the seal plug cover into the valve body (see Image 61).

Image 61

APPENDIX

Appendix E – Insta-Valve 20" – 24" Product Cut Sheet

© 2026 Hydra-Stop | All Rights Reserved. | Specifications subject to change without notice. This page has been intentionally left blank.

Appendix E — Insta-Valve 20-24 - Product Cut Sheet

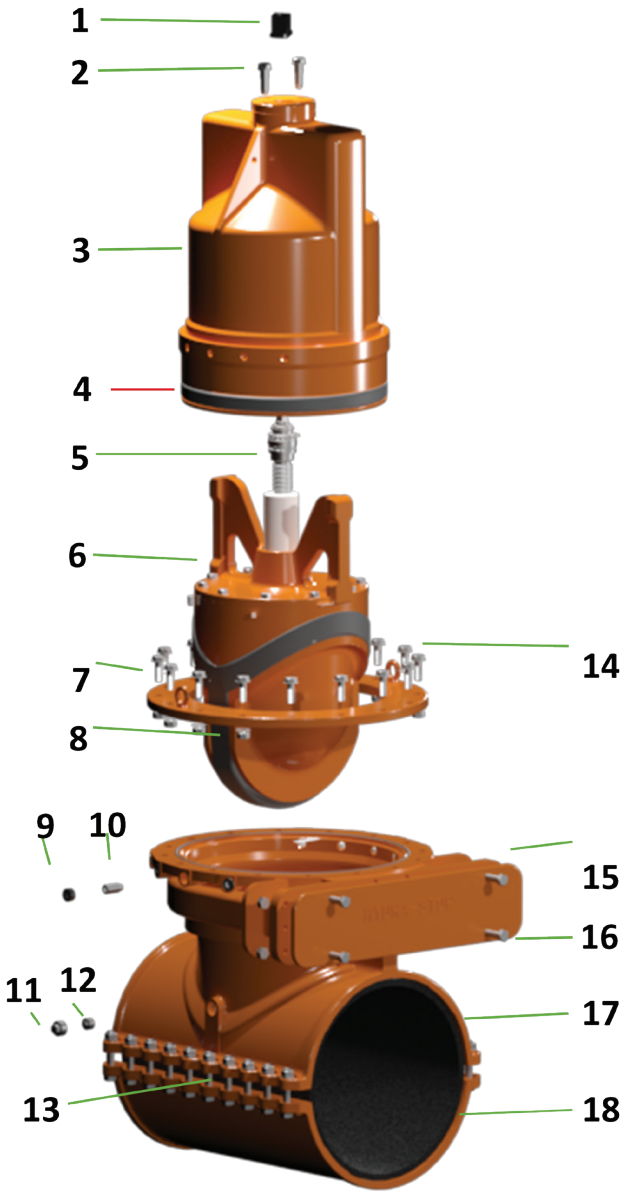

Item	Name	Material	Qty.
1	Operating Nut	Steel, Cast	1
2	Bonnet Cover Bolts	Stainless Steel	4
3	Bonnet Cover	Ductile Iron	1
4	Seal Ring	SBR Rubber	1
5	Feed Screw	Stainless Steel	1
6	Valve Cartridge Assembly	Various	1
7	Bonnet Flange	Ductile Iron	1
8	Resilient Wedge	SBR Rubber	1
9	Set Pin Cover Plug	Steel, S25C	20" valve - 6 24" valve - 8
10	Set Pin	Stainless Steel	20" valve - 6 24" valve - 8
11	Seal Plug Cover	Stainless Steel	1
12	Seal Plug	Stainless Steel	1
13	Valve Mounting Hardware (Bolts, Nuts, Washers)	Stainless Steel	20" valve: Bolts - 18 Nuts - 18 Washers - 36 24" valve: Bolts - 22 Nuts - 22 Washers - 44
14	Bonnet Flange Hardware	Stainless Steel	Bolts - 16 Nuts - 16 Washers - 32
15	Gate Valve Cover	Ductile Iron	1
16	Gate Valve Cover Bolts	Stainless Steel	4
17	Upper Valve Body	Ductile Iron	1
18	Lower Valve Body	Ductile Iron	1

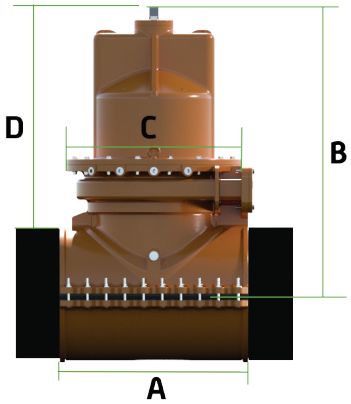

Dimensions

Size	A	B	C	D	Approx. Weight
20"	35.5"	52.5"	32.5"	42"	2,228 lbs
24	39.5"	60.5"	36"	47"	3.139 lbs

Other Specifications

Valve Body Minimum Test Pressure: 1.5 times system working pressure
Valve Body Maximum Test Pressure: 225 psi, Maximum Working Pressure: 150 psi
Coatings: Inside - .3 mm epoxy-powder coating. Outside - .25 mm epoxy powder coating

Proprietary Information: This property of Hydra-Stop shall not be used, reproduced or distributed without written consent. All design and invention rights are reserved. Materials, pricing and specifications subject to change without notice.

© 2026 Hydra-Stop | All Rights Reserved. | Specifications subject to change without notice. This page has been intentionally left blank.

APPENDIX

Appendix F – Installation Equipment

© 2026 Hydra-Stop | All Rights Reserved. | Specifications subject to change without notice. This page has been intentionally left blank.

Appendix F — Installation Equipment

Equipment Image	Name
	Temporary Gate Valve
	Tapping Machine
	Insertion Machine
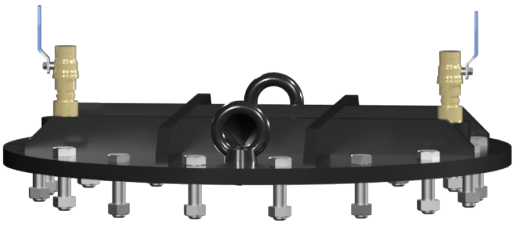	Test Flange
	Valve Suspenders

Appendix F — Installation Equipment

Equipment Image	Name
	Insertion Housing
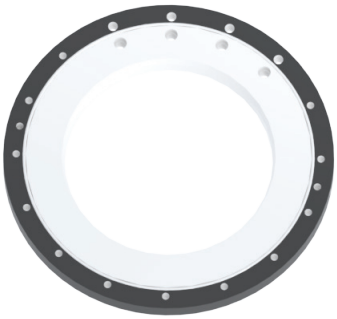	20" to 24" Adapter Flange
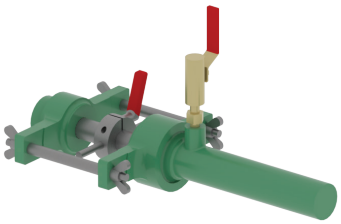	Seal Plug Tool

APPENDIX

Appendix G — Standard Tools

© 2026 Hydra-Stop | All Rights Reserved. | Specifications subject to change without notice. This page has been intentionally left blank.

Appendix G — Standard Tools

No.	Name	Size and spec etc.
1	Rachet wrench	24, 30, 36 mm
2	Open Ended Wrench	24, 36, 65 mm
3	Adjustable wrench	Total length: 300 mm, Max. opening 34 mm
4	Pipe wrench	Total length: 300 mm, Max. diameter 70 mm
5	Rachet handle	Total length: 270 mm
6	Long hexagon Allen Wrench	17 mm
7	Hexagon Allen Wrench	19,22 mm
8	Torque wrench	Max. 300 ft. lbs.
9	Hexagonal socket (deep)	36 mm Depth: 100 mm
10	Mini lever hoist	Max. load: 550 lbs., Chain length: 6.5 feet
11	Hammer	Dead blow type

(Unit: mm)

© 2026 Hydra-Stop | All Rights Reserved. | Specifications subject to change without notice. This page has been intentionally left blank.

APPENDIX

Appendix H — Side Tapping and Horizontal Bevel Gear Use

© 2026 Hydra-Stop | All Rights Reserved. | Specifications subject to change without notice. This page has been intentionally left blank.

© 2026 Hydra-Stop | All Rights Reserved. | Specifications subject to change without notice. This page has been intentionally left blank.

Appendix H — Side Tapping and Horizontal Bevel Gear Use

Important Installation Notes:

A concrete pad is required at the base of the excavation site to ensure a stable base for blocking. Due to varying site conditions, final site preparation requirements should be left to the project engineer.

See Appendix I for excavation details. See Appendix J for concrete support dimensions. Please note that these are Hydra-Stop's recommendations and the project engineer should always be consulted before pouring concrete.

Either pipe restraints must be installed or concrete must be poured before operating the valve. Failure to do so could result in the valve shifting on the pipe. **Pipe restrains are NOT supplied.** Installer is responsible for providing restraints.

Maximum allowable pitch on the pipe is 15°.

H.1) Preparation for Installation

H.1.1) Check and inspect the installation location. A concrete pad is required to ensure a stable base for blocking.

NOTE: Failure to prepare the area for proper blocking could result in an installation failure. Ensure that blocking is secure so that it will not move because it will be left behind. Blocking must be stable enough to withstand back filling and/or cement pouring.

H.1.2) Thoroughly clean the pipe surface with a wire brush where the valve body will be installed to ensure all loose debris and material is removed.

H.1.3) Utilizing safe lifting procedures and equipment, place the valve body and valve sleeve into position to be mounted horizontally.

H.2) Assembly of Valve Body

H.2.1) Before lifting and rotating the valve body into the installation position, lubricate the surface of the rubber throat gasket at around the valve opening.

Image H1

H.2.2) Rotate the valve body into mounting position (see Image H1).

- Drain assembly ball valve must be facing towards the ground at this position (see Image H2).
- Rig the body and sleeve to mount horizontally.

H.2.3) Install mounting bolts to attach the sleeve to the valve body and finger tighten the nuts and bolts.

H.2.4) Put a level on the upper valve body and tighten the bolts and nuts. Use blocking to support the valve body before fully tightening hardware.

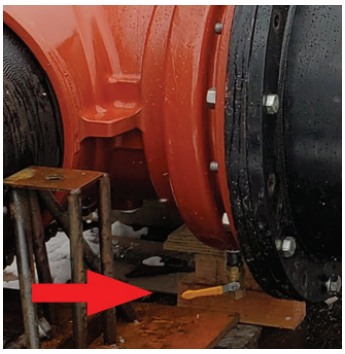

Image H2

NOTE: Ensure that blocking is secure enough to be buried with the valve.

H.2.5) Using a torque wrench, tighten nuts in proper pattern. Repeat tightening pattern in no more than 25 ft. lb. increments until recommended torque is reached.

H.2.6) Wait 10 minutes to allow the gasket to fully seat then re-tighten bolts to recommended torque three addition times, following the tightening pattern.

H.2.7) Check and re-adjust the support blocks or jacks under the valve body to be sure they are supporting the valve.

H.2.8) Remove the set pin cover plugs.

H.2.9) Wrap Teflon seal tape on the set pin cover plugs and re-install into the valve body.

H.3 Assembly of Temporary Gate Valve

H.3.1) Open the temporary gate valve. Be sure to block under and support the gate (see Image H3).

H.3.2) Lubricate the temporary gate valve gasket and the O-ring on the rectangular face of the temporary gate valve flange.

H.3.3) Lift the temporary gate valve utilizing a chain fall to account for weight imbalances.

- Orient the gate valve to match up to the rectangular flange on the valve body.

H.3.4) Remove the nuts and bolts holding the temporary gate valve cover in place on the valve body. Remove the temporary gate valve cover. Keep the bolts and nuts in a safe location.

H.3.5) Lift and move the temporary gate vale towards the temporary gate valve attachment port of the valve body. Level the temporary valve with the chain fall.

Image H3

Appendix H — Side Tapping and Horizontal Bevel Gear Use

H.3.6) Mount the temporary gate valve to the rectangle flange of the valve body using the bolts and adjust the circular portion of the gate valve into the gate valve slot on the valve body until the flanges come into contact with each other.

H.3.7) Block and support below the temporary gate valve after installing the nuts and bolts and before removing the lifting devices (see image H4).

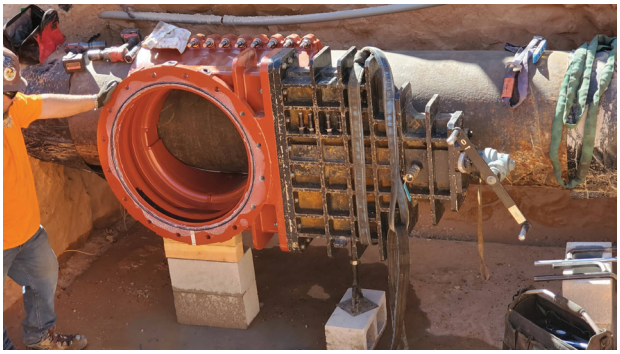

Image H4

Image H5

H.4) Hydrostatic Test

H.4.1) Remove the seal plug NPT cover plug and place in a safe location for later use.

H.4.2) Assemble the drain parts.

H.4.3) Place the O-ring on the valve body using a food grade lubricant to hold in place (see Image H5).

H.4.4) Using a lift, place the test flange on the valve.

H.4.5) Remove the top middle set pin on the valve body.

H.4.6) Fill the valve body with water and use the set pin hole to purge all air. Once the valve is full, place the set pin back into the valve body.

H.4.7) Connect a pressure gauge and pressure test pump to the test lid and begin pressure test procedure.

H.4.8) Blow off pressure before removing the test flange.

H.4.9) Remove the test flange.

H.4.10) Following the tightening pattern, re-torque the mounting bolts to recommended torque one additional time.

H.5) Assembly of Tapping Machine

H.5.1) Assembly of the tapping equipment can be completed before reaching the job site to save time.

Image H6

H.5.2) Assemble sweeping attachments to the cutter with provided hardware and wrench tighten (see Image H6).

H.5.3) Position the tap machine horizontally. Be sure to block and support the machine near the operating handles. Operate the handle to advance the boring bar forward until it is out of the tapping housing far enough to allow the cutter to be mounted.

H.5.4) Lift the cutter and engage the clutches between the cutter and boring bar.

H.5.5) Slide the pilot drill through the cutter and clutch drive assembly. Thread the pilot drill into the boring bar until it is hand tight.

H.5.6) Retract the boring bar back inside the tapping housing and reset the counter to zero.

NOTE: Counter may not reach zero due to the sweeping attachments. Counter should not read above 10.

H.5.7) Use masking tape to secure the coupon clips of the pilot drill.

H.5.8) Place the pilot drill tightening tool over the hexagon nut of the pilot drill and use to tighten.

H.5.9) On the valve body, use tape to cover the bottom set pin holes (see Image H7).

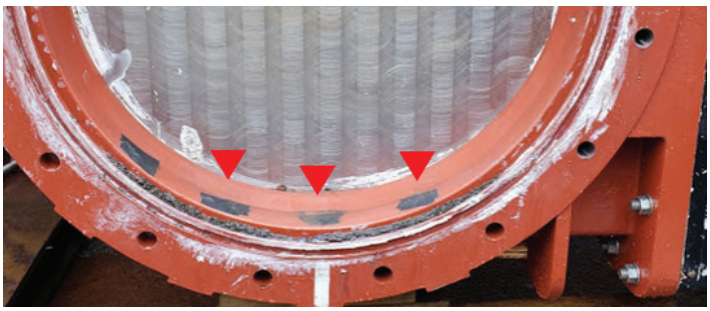

Image H7

H.5.10) Lift the tapping machine horizontally with three points of contact. Attach straps to the tapping machine lifting rings and a chain block connected to a hole on the housing flange.

H.5.11) Ensure that the O-ring is still in place on the valve body.

Appendix H — Side Tapping and Horizontal Bevel Gear Use

H.5.12) Mount the tapping machine on the valve body in the horizontal position.

H.5.13) Block and support the machine near the operating handle (see Image H8).

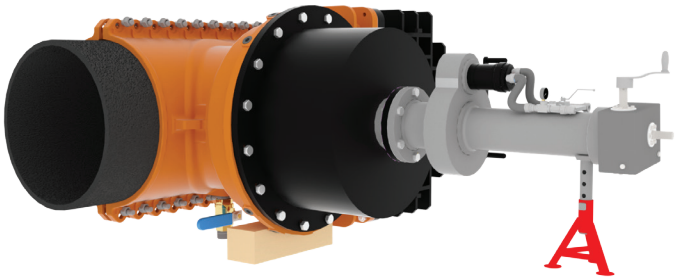

Image H8

H.5.14) Connect the hydraulic power unit to the machine.

H.5.15) Connect the drain hose and chip container to the drain part assembly on the valve body.

H.5.16) Ensure that the temporary gate valve is completely open and extend boring bar until pilot touches the top of the pipe.

H.6) Performing the Tap

H.6.1) Attach flushing hose and strainer to the flushing port ball valves.

H.6.2) Open the ball valves on top of the tapping housing to allow air and fluid to escape from the tapping housing after the pilot drill penetrates the pipe.

H.6.3) Open the drain assembly ball valve to assist in flushing of chips as the tap is in process.

IMPORTANT: Failure to flush chips can prevent the cartridge from sealing when inserted.

H.6.4) Engage the drive unit. Slowly turn the handle assembly in a clockwise direction keeping slight, constant pressure until the tap is complete.

H.6.5) Close the ball valve on the tap housing as water fills the housing and flows from the valve.

H.6.6) The tap is complete when the depth counter reaches the desired depth. Tap until the counter reaches 650. DO NOT tap past 700.

H.6.7) Retract the cutter until the counter reads 450 before stopping the tapping machine.

H.6.8) Turn off the drive unit.

H.6.9) Retract the cutter assembly until the depth counter reaches zero or its original position.

Image H9

Image H10

H.6.10) Close the temporary gate valve.

H.6.11) Close the flushing port ball valve.

H.7) Assembly of Valve Cartridge, Insertion Machine, and Insertion Housing

H.7.1) Place the valve cartridge on supports.

H.7.2) Lubricate the rubber ring on the valve cartridge with the designated lubricant (see Image H9).

H.7.3) Remove the 2 bolts of the valve stem cover on the upper side of the valve cartridge, which are in line with the shoulders of the valve cartridge.

H.7.4) Connect the valve suspender to the valve cartridge using the bolts just removed. Tighten these bolts until finger tight so there is no gap between the bolts and valve suspender.

H.7.5) Connect the valve insertion scooter to the cartridge gusset. The scooter should be on the side of the cartridge that will be in line with the drain valve on the valve body. The 20" and 24" have separate scooters, be sure to use the correct one (see Image H10).

H.7.6) Place the empty insertion housing on support to provide clearance for the valve cartridge assembly which is taller than the insertion housing.

H.7.7) Lift the insertion machine flange above and centered over the valve cartridge. Lower insertion flange until the valve suspender contacts the insertion flange.

H.7.8) Thread the insertion flange gut rod into the valve suspender and lift the insertion flange with the cartridge attached.

H.7.9) Lift the valve cartridge and insertion flange and place them on the insertion housing. Make certain the white line on the insertion flange is aligned with the white line on the insertion housing.

H.8) Assembly of Inserting Tool

H.8.1) Lift the insertion housing using two points of contact and utilizing a chain fall. Slowly position until it is horizontal.

NOTE: Ensure that the correct side of the insertion housing is facing down so that the line on the housing and the line on the valve body match up.

Appendix H — Side Tapping and Horizontal Bevel Gear Use

When the insertion housing is horizontal, the valve scooter should be on the bottom supporting the cartridge.

H.8.2) Place the insertion housing on the valve body and ensure the white lines are aligned. Block the insertion housing (see Image H11).

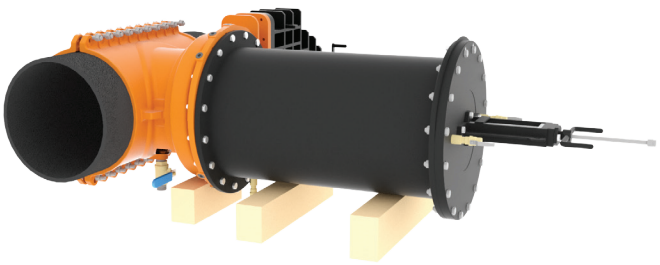

Image H11

H.8.3) Connect the insertion housing with the supplied bolts, nuts, and washers.

H.8.4) Connect the equalization hose to the equalization port of the insertion housing with the union coupling on the side of the valve body.

H.9) Inserting the Cartridge

H.9.1) Follow the steps in Section 2.10.0 on page 9.

H.10) Removal of Inserting Tool

H.10.1) Follow the steps in Section 2.11.0 on page 10.

H.11) Removal of Insertion Housing

H.11.1) Loosen and remove the nuts and bolts securing the insertion housing to the valve body or the adapter flange.

H.11.2) Using the same lifting method as before, carefully slide the insertion housing away from the valve body until it has cleared the cartridge before lifting.

NOTE: **Weight distribution has changed since the cartridge is no longer inside the housing.**

H.11.3) Remove the valve suspender from the valve cartridge.

H.11.4) Remove the valve scooter from the valve cartridge.

H.11.5) Block the valve cartridge.

H.12) Installing the Bevel Gear Assembly

H.12.1) Remove the remaining two bolts from the valve stem cover.

H.12.2) Place the feed screw to bevel gear adaptor over the feed screw.

H.12.3) Line up the bolt holes on the bevel gear mounting plate so that the operating nut on the gearbox is facing up.

H.12.4) Turn the operating nut to match the inner drive bushing geometry with the adaptor piece's position and slide the assembly over the adaptor.

NOTE: The mounting plate should be flush to the valve stem cover.

H.12.5) Use the bolts and provided lock washers to secure the bevel gear to the valve stem cover. Tighten and ensure that the bevel gear assembly is secure (see Image H12).

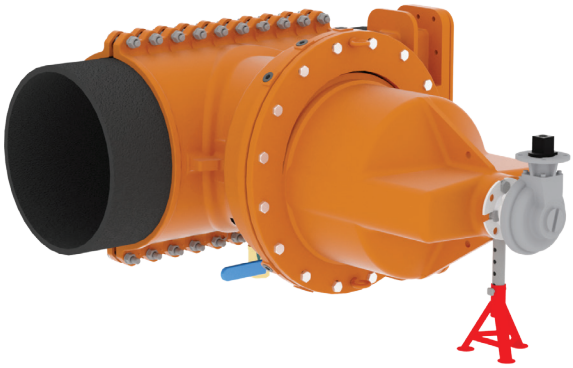

Image H12

H.12.6) Add valve box adaptor over the gearbox (valve box not provided).

NOTE: **Failure to follow these instructions can result in an inoperable valve.**

H.13) Operating Turns

H.13.1) Operating turns are below.

- 20" valve: 216–222 turns
- 24" valve: 234–240 turns

H.14) Trench Dimensions

H.14.1) Recommended Trench Dimensions: 10 ft. wide x 20 ft. long

H.15) Minimum Required Depth

- 12" below pipe everywhere
- 24" below pipe for drain valve assembly

APPENDIX

Appendix I – 20”–24” Valve Horizontial Excavation Details

© 2026 Hydra-Stop | All Rights Reserved. | Specifications subject to change without notice. This page has been intentionally left blank.

Appendix I — 20"–24" Valve Horizontal Concrete Support Details

EXCAVATION DIMENSIONS ARE FOR USE WITH HYDRA-STOP PROVIDED EQUIPMENT

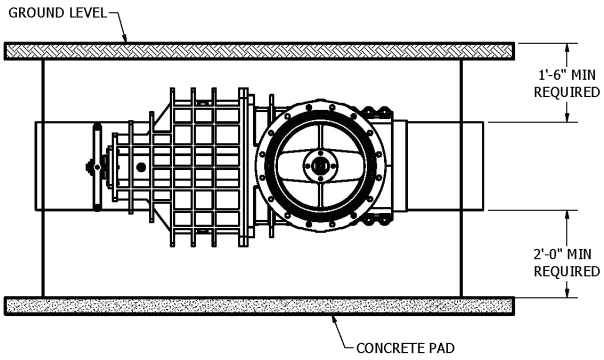

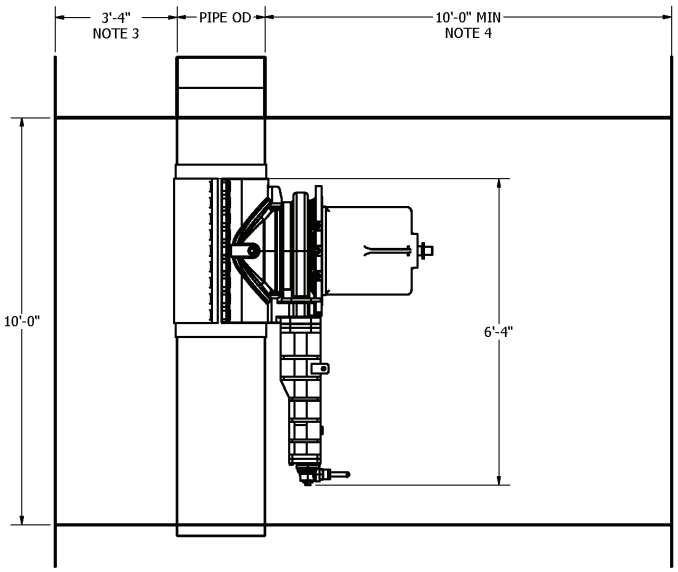

NOTES:
1. BLOCK ALL PARTS OF THE VALVE AS OUTLINED IN THE INSTALLATION PROCEDURE
2. EXCAVATING 2FT DIRECTLY BELOW THE VALVE BODY IS REQUIRED FOR THE DRAIN VALVE ASSEMBLY
3. 40" (3'-4") BEHIND THE VALVE IS A RECOMMENDATION FOR EASE OF MOVEMENT
4. MINIMUM REQUIRED EXCAVATION LENGTH IN FRONT OF THE PIPE IS 120" (10') FOR PROPER INSTALLING AND REMOVING OF BOTH TAPPING AND INSERTION HOUSINGS.

Proprietary information: this drawing, the principles & the elements of design embodied therein are the exclusive property of **HYDRA-STOP, LLC.** & are not to be communicated, disclosed, reproduced, or used except as previously authorized in writing by said company & must not be submitted to outside parties for exam without the consent of said company.

DRAWN achoi	9/26/2022	HYDRA-STOP
CHECKED		TITLE: Recommended Excavation for 20-24 IV Side Installation
QA		
MFG		
APPROVED		
SIZE B	DWG NO Excavation Drawing 9.26.22	REV A
SCALE .048		SHEET 1 OF 1

© 2026 Hydra-Stop | All Rights Reserved. | Specifications subject to change without notice. This page has been intentionally left blank.

APPENDIX

Appendix J — 20"–24" Valve Horizontal Concrete Support Details

© 2026 Hydra-Stop | All Rights Reserved. | Specifications subject to change without notice. This page has been intentionally left blank.

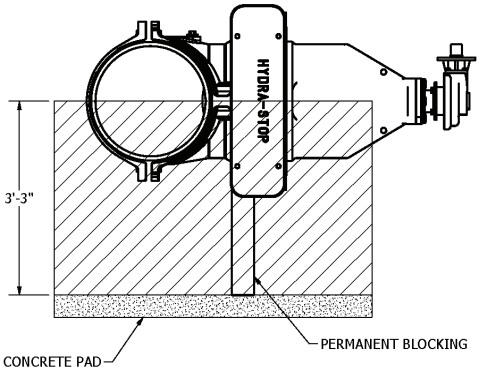

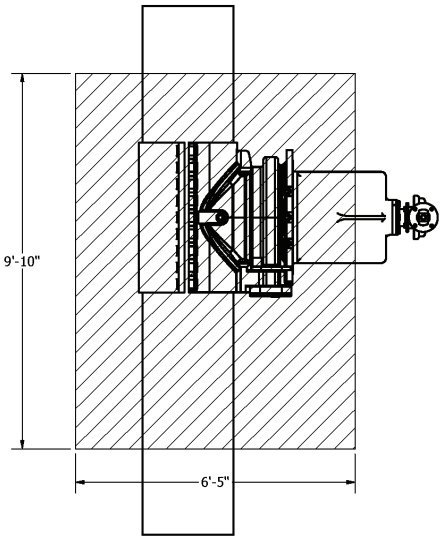

NOTES:
1. IF PIPE RESTRAINTS ARE NOT INSTALLED, CONCRETE SUPPORT MUST BE POURED BEFORE OPERATING THE VALVE
2. ALWAYS CONSULT WITH THE PROJECT ENGINEER FIRST FOR CONCRETE REQUIREMENTS
3. BLOCKING IS PERMANENT, DO NOT REMOVE BEFORE POURING CONCRETE

Proprietary information: this drawing, the principles & the elements of design embodied therein, are the exclusive property of HYDRA-STOP, LLC. & are not to be communicated, disclosed, reproduced, or used except as previously authorized in writing by said company & must not be submitted to outside parties for exam without the consent of said company.

UNLESS OTHERWISE SPECIFIED
DIMENSIONS ARE IN INCHES
BREAK ALL SHARP CORNERS
TOLERANCES:

DECIMALS: (inch)	DECIMALS: (mm)
.X = ±.03	.X = ±.8
.XX = ±.01	.XX = ±.25
.XXX = ±.005	.XXX = ±.13
ANGLES = ±2°	ANGLES = ±2°

MAXIMUM SURFACE FINISH = 63
MAXIMUM INTERNAL FILLET = .02"

DRAWN	achoi	11/18/2021
CHECKED		
QA		
MFG		
APPROVED		

HYDRA-STOP

TITLE
Recommended Concrete Support for 20-24 IV Side Installation

SIZE	DWG NO	REV
B	Concrete Fill Drawing 11.18.21	A

SCALE .05 SHEET 1 OF 1

HYDRA-STOP
FROM PENTAIR

144 TOWER DRIVE SUITE A, BURR RIDGE, IL 60527
PH: 708.389.5111 | E: CONTACT_US@HYDRA-STOP.COM | HYDRA-STOP.COM

Because we are continuously improving our products and services,
Hydra-Stop from Pentair reserves the right to change specifications without prior notice.

© 2026 Pentair llc. All Rights Reserved.